9 HARDWARE

ESSENTIAL KNOWLEDGE

Hardware is often used to describe the operation of doors and windows. For example, a door slab may be either a swinging, sliding, or pocket door (depending on how the hardware operates) and either passage, privacy, or entrance (depending on the locking mechanism). Often the greatest difficulty in the repair or replacement of hardware is identifying a source of suitable components. Several large distributors and services now exist that provide exhaustive catalogs with hardware very close in appearance and function to the original, if not an exact match.

New hardware has been developed to ease the installation of new preassembled fenestration products, such as pre-hung and pre-bored doors. Installation formerly performed in the field to assure proper alignment now can be performed by the supplier, who assembles the entire unit in the shop to be installed as a modular unit. The options for repair are most often replacement. New products and tools are designed to require minimal carpentry skills.

Fenestration hardware can be classified in three primary groups: hinges, tracks, guides, or a closer device for the purpose of determining movement; lockset, stop, or catch as a means of securing operable parts; and door knobs, lever handles, pull handles, or push plates as operating mechanisms. Other items to supplement these include thresholds and weatherstripping, discussed in Section 11. Most common residential hinges are a variation of the butt hinge—two plates or "leafs" secured to opposing sides that pivot around a pin connection created by alternating knuckles forming a barrel. Hinges may be mounted either on the surface, with their leafs concealed and only the barrel exposed, or entirely concealed (Fig. 1). Doors described as gliding, sliding, bypass, or pocket employ some form of a track or guide mechanism. The track or guide directs the movement of a series of rollers that are either top or bottom mounted. Guides are typically used where infiltration is not an issue, such as closet doors. Tracks provide a continuous barrier that can be weatherstripped, such as for a sliding patio door. Windows such as gliders also employ tracks with rollers for horizontal operation or double-hung windows use tracks with a friction fit. Closers are hydraulic (liquid filled) or pneumatic (gas filled) mechanisms that regulate the closing speed of a door. Closers can be adjusted to allow time to travel through a doorway while reducing the impact load of a heavy door on the frame. Spring hinges are generally a less costly means of assuring closure but cannot be regulated for speed or force. Windows and doors use such counterbalances as springs, weights, and screw devices for ease of operation. Other means of controlling the swing radius of a door or sash include either wall, floor, or hinge-mounted bumpers that resist the force or hold the door in an open position.

The simplest means of securing a door or window is a catch. Magnets, friction, and spring-tension devices provide just enough resistance so as not to release the unit. Safety latches can prevent access by children to hazardous areas and typically require a combination of actions to open. Interlocking

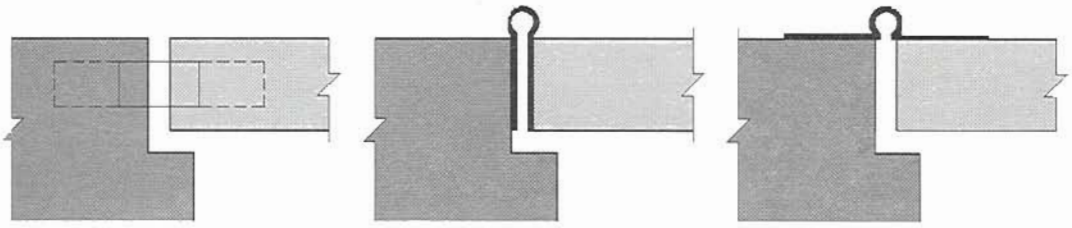

FIGURE 1 INVISIBLE, CONCEALED, AND EXPOSED HINGES

catches provide a degree of security and a tight seal (tension). Windows may use latches in combination with sliding rods or crank mechanisms to regulate openings. Crank mechanisms have been the subject of such improvements as automated remote windows and skylights, or scissor-like hinge mechanisms to accommodate heavier sashes. Guards secure fenestration while providing a view to the exterior. Guards are simple devices that limit the swing of a door when it is open with a chain or hinged bar on the strike side that is detachable when closed.

Locksets are commonly used on doors. Three common lock types are surface mounted (or rim lock), mortised units, and bored units (Fig. 2). Surface or rim locks are most often associated with deadbolts and deploy a bolt through an independent strike with a lock cylinder. Increased security is provided by longer bolts that are not spring activated. Mortised locks have been considered to be more durable but difficult to install in wood doors, and are typically found in older houses. Bored locks are inserted through holes bored in the door slab and can be described as either cylindrical, tubular, or interconnected. Tubular locks, the most common, prevent the knob from turning when locked. Interconnected locks use two mechanisms operated with a single key or with use of a single knob. All locks deploy one or more bolts that secure the operable door panel to a fixed surface (strike plate). The bolts are described as either spring latch (deploy in one direction without action, but more vulnerable to tampering) or deadbolt (requires action from both sides).

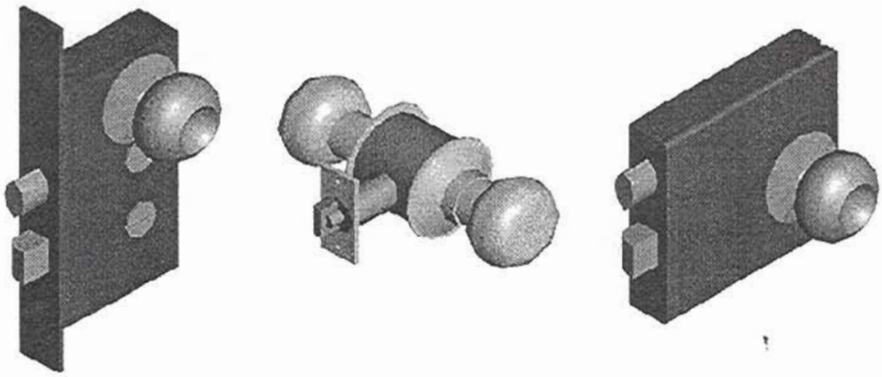

FIGURE 2 MORTISE LOCK CYLINDER BORED LOCK RIM LOCK

Hardware for door and window operation includes knobs and pulls (Fig. 3). Handles that lay flush are composed of bails and escutcheon plates. Operating hardware in combination with latches or locks can be either passage, privacy, or entrance. Passage devices provide access by means of releasing a spring loaded latch. Privacy devices commonly used on bathroom and bedroom doors have a thumb turn to restrict operation from the exterior. Entrance locks preserve security, with the operating hardware usually an integral part of the mechanism.

Hardware exposed to either climatic or harsh conditions is usually of non-ferrous metals such as brass, bronze, stainless steel, aluminum, or plated steel. Recently new materials have been developed that provide similar qualities but are less expensive or easier to form into complex shapes.

Hardware selection should consider ease of operation, installation requirements, durability, aesthetics, and security. For example, the selection of a hinge should take into account the following: frame and sash material of the door or window; number required; mounting method; the size, thickness, and weight of the door or window; clearance of hinge to avoid casing; frequency of use; the threat of intrusion; and applicable building codes. If a change is made to the original hardware there are other code issues that may apply, such as accessibility standards, fire codes, and egress requirements. *The National Fire Protection Association* (NFPA) *Standard for Fire Doors and Fire Windows NFPA 80* provides a useful guide for the selection of rated and non-rated doors and is often required by manufacturers for compliance with

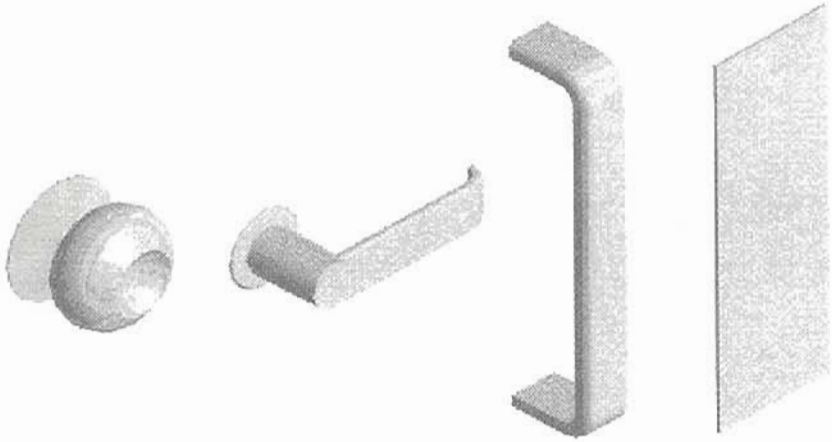

FIGURE 3 DOOR KNOB, LEVER HANDLE, PULL HANDLE, PUSH PLATE

their warranties. Locks may be in accordance with an ANSI standard that uses such criteria as resistance to forced entry and picking. There are three security grades: Grade 1 (high security), Grade 2 (light commercial and exterior home entrances), and Grade 3 (interior applications such as bedrooms or bathrooms). Accessibility regulations govern the design and construction of multi-family residential buildings but not single family private residences. ANSI A117.1 is the most common standard for accessibility requirements (including the Accessibility Guidelines of the Fair Housing Act), establishing minimum requirements for the location of hardware and ease of operation. Manufacturers now typically label products for compliance with the ANSI standard. There are numerous products that have been developed for retrofitting existing homes for accessibility (see Further Reading).

TECHNIQUES, MATERIALS, TOOLS

1. REPAIR/REPLACE EXISTING HARDWARE WITH ORIGINAL COMPONENTS.

The repair of existing hardware components is often difficult at best, requiring specialized skills. Hardware is subject to repeated stress and components that fail or have become worn should be replaced with materials of similar or equal strength. Few, if any, replacement parts are readily available.

ADVANTAGES: The primary advantage to repair is the ability to preserve existing appearance.

DISADVANTAGES: The effort and cost associated with repair may easily exceed the cost of a complete replacement unit.

2. REPLACE EXISTING HARDWARE WITH NEW UNITS.

Hardware is often a complex mechanical apparatus, subject to both fatigue and wear. The replacement of the entire unit, available in many variations, assures all parts will have similar life-span. New materials, such as high-density polyethylene washers, provide for years of operation without the necessity for regular maintenance. Reproduction and salvaged hardware is available from national distributors who specialize in historic hardware. These distributors will often provide assistance in matching existing hardware with salvaged or new materials.

ADVANTAGES: Often the lowest cost alternative, with materials widely available.

DISADVANTAGES: No precise match may be available for existing hardware to match other components of a door or window.

FURTHER READING

"Installing Locksets," Gary M. Katz, *Fine Homebuilding*, February/March 1993, pp. 40- 45.

"Locks & Alarms: Old House Security," David Swearingen, *The Old-House Journal*, December 1986, pp. 472-475.

"Natural Selection," Timothy Taylor and Michael J. Crosbie, *Doors and Hardware*, March 1997, pp. 45-53.

"Upgrading Door Locks and Deadbolts," Dan Bowers, http://index.todayshomeowner.com/todayarticles/door/06.95.30.html.

NFPA 80-1990, Standard for fire doors and windows, National Fire Protection Association, Quincy, MA.

PRODUCT INFORMATION

Ball and Ball Hardware Reproductions, 463 W. Lincoln Highway, Exton, PA 19341; 800-257-3711.

Barry Supply Co., 36 West 17th Street, New York, NY 10011; 212 242 5200 (window replacement hardware).

Blaine Window Hardware, Inc., 17319 Blaine Dr., Hagerstown, MD 21740; 800-678-1919.

Cirecast, 380 7th Street, San Francisco, CA 94103; 415-863-8319.

Custom Service Supply Corporation, 1801 NE 51st Street, Pompano Beach, FL 33064; 800-933-3888; www.customservice.com.

Crown City Hardware Co., 1047 N. Allen Ave., Pasadena, CA 91104.

Dawson's Supply, Inc.; www.dawsonsupply.com.

Guardex High Security Strike, Master Lock Co., 300 Webster Road, Auburn, AL 36830; 205-826-3300.

GRK Canada Ltd., R.R. #1-1499 Rosslyn Rd., Thunder Bay, Ontario, P7C 4T9; 800-263-0463.

G-U Hardware, Inc., 11761 Rock Landing Drive, Suite M-6, Newport News, VA 23606-4235.

Knape & Voght Mfg. Co., 2700 Oak Industrial Drive, Grand Rapids, MI, 49505; 800- 253-1561; www.kv.com.

Kwikset Corporation, 516 East Santa Ana Street, Anaheim, CA 92803-4250; 714 535 8111.

L.E. Johnson Products, Inc., 2100 Streling Avenue, Elkhart, IN 46516; 800-837-5664.

Newman Tonks, P.O. Box 548, Shepardsville, KY, 40165; 800-826-5792; www.neuman tonks.com.

Piersons, P.O. Box 663, Edgemont, PA 19028; 800-446-9111; www.piersons.com (hardware supplier with search service).

Pullman Mfg. Corp., 77 Commerce Dr., Rochester, NY 14623; 716-359-1350 (spring counterbalances).

Resource Conservation Technology, Inc., 2633 North Calvert Street, Baltimore, MD 21218; 410-366-1146.

Schlage, 2401 Bayshore Boulevard, San Francisco, CA 94134; 415-330-5600; www.schlagelock.com.

Stanley Hardware, The Stanley Works, New Britain, CT; 800-622-4393.

Truth Hardware, SPX Corporation, 700 West Bridge Street, Owatonna, MN 55060; 507-451-5620.

U-Change Lock Industries, Inc., 1640 West Highway 152, Mustang, OK, 73064; 405-376-1600.

Weiser Lock, 6700 Weiser Lock Drive, Tuscon, AZ 85746; 800-677-LOCK; www.powerbolt.com.

Yale Locks & Hardware, P.O. Box 25288, Charolettte , NC, 28229-8010; 800-438-1951; www.yalesecurity.com.